SCHEMATIC

(CHASSIS

PAL - B
SECAM -
NTSC M

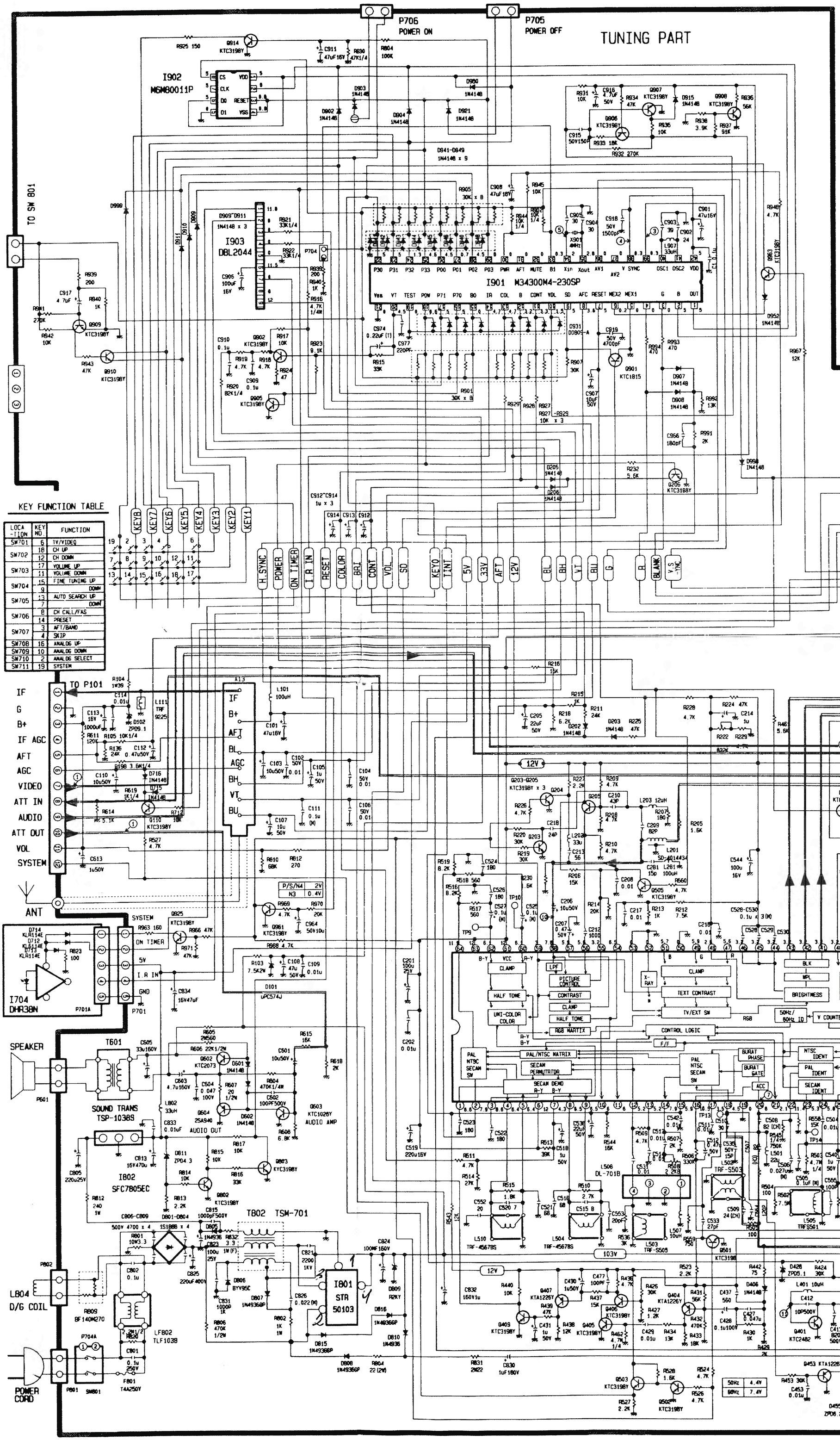

WAVE FORM

P551A

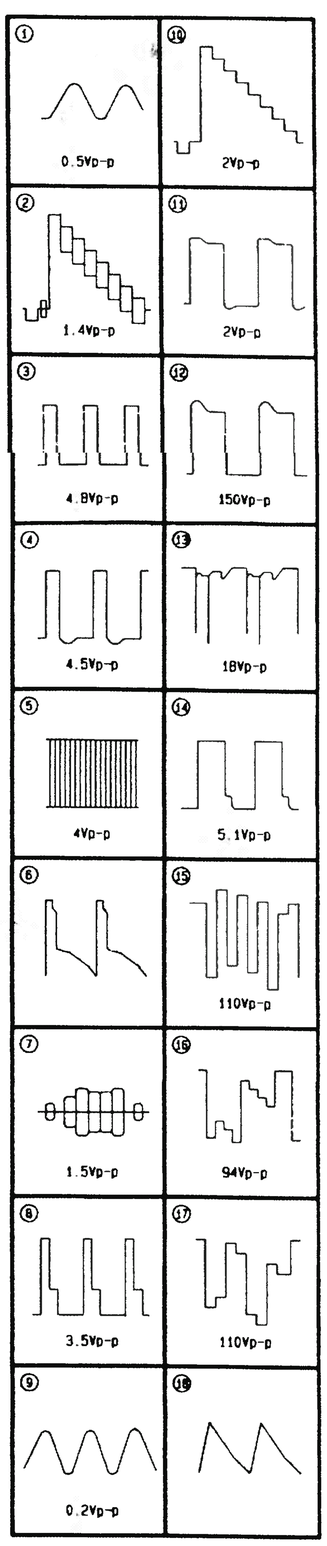

IC DIAGRAM

IS : C-50N)

- B/G D/K I/H
- B/G D/K
M - 3.58/4.43

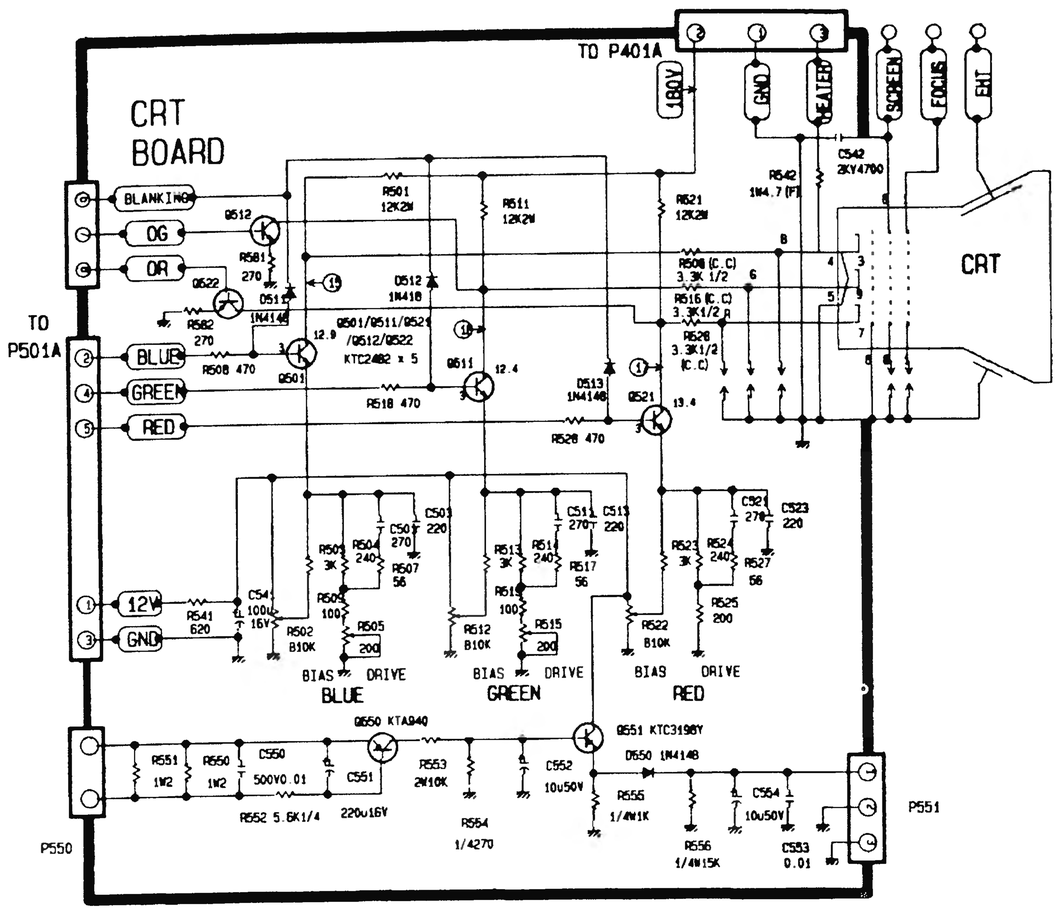

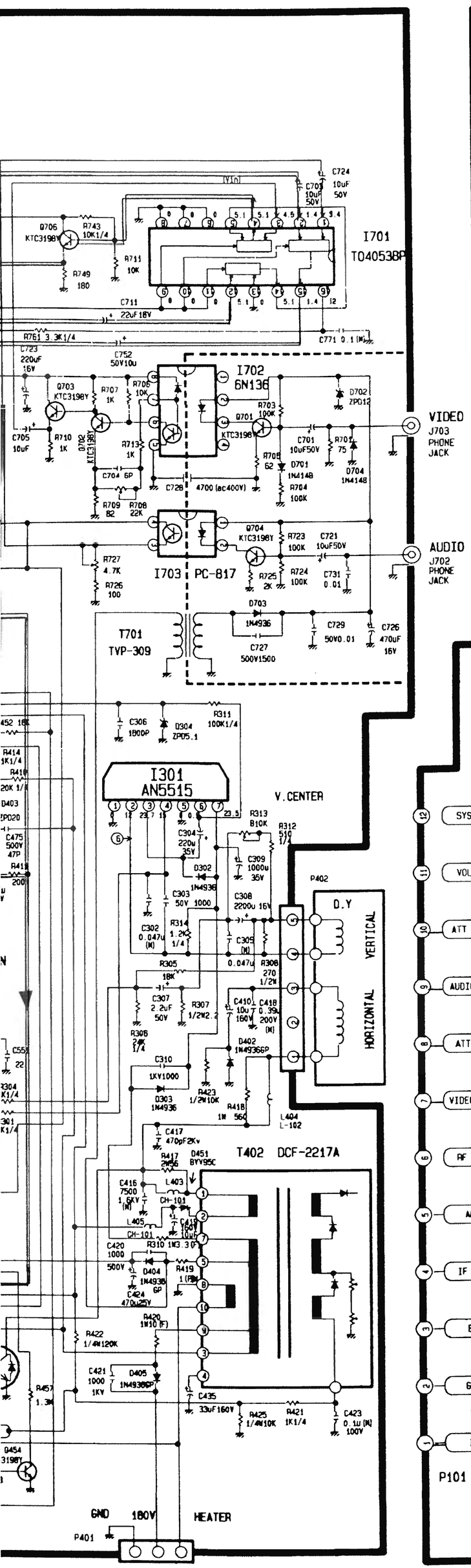

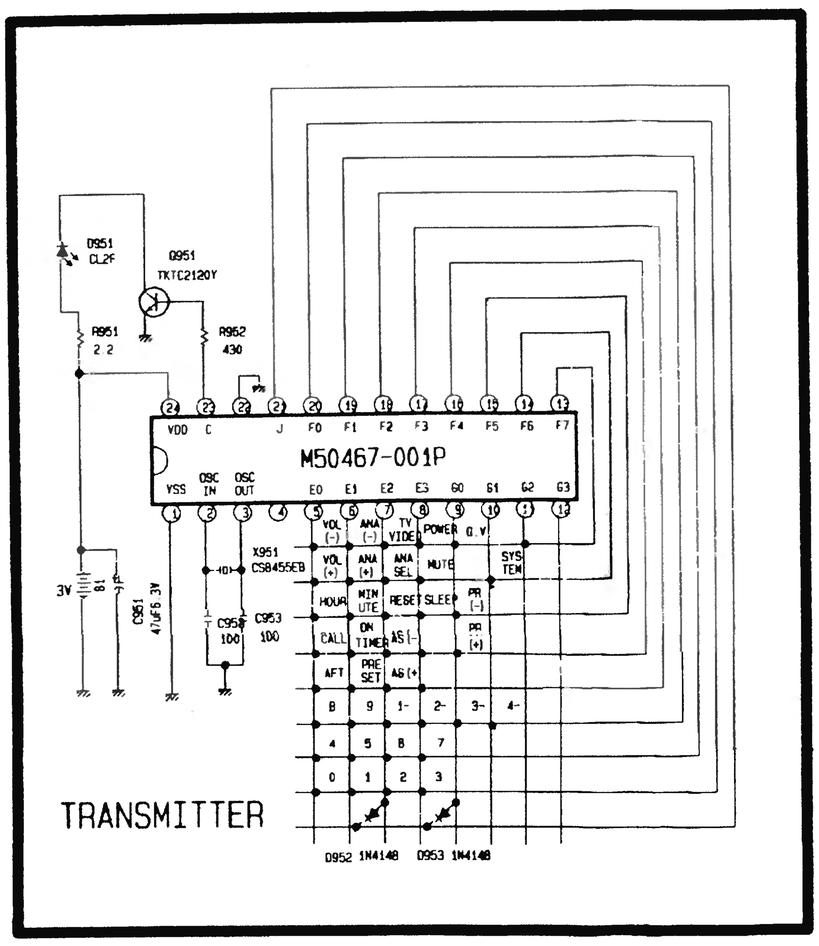

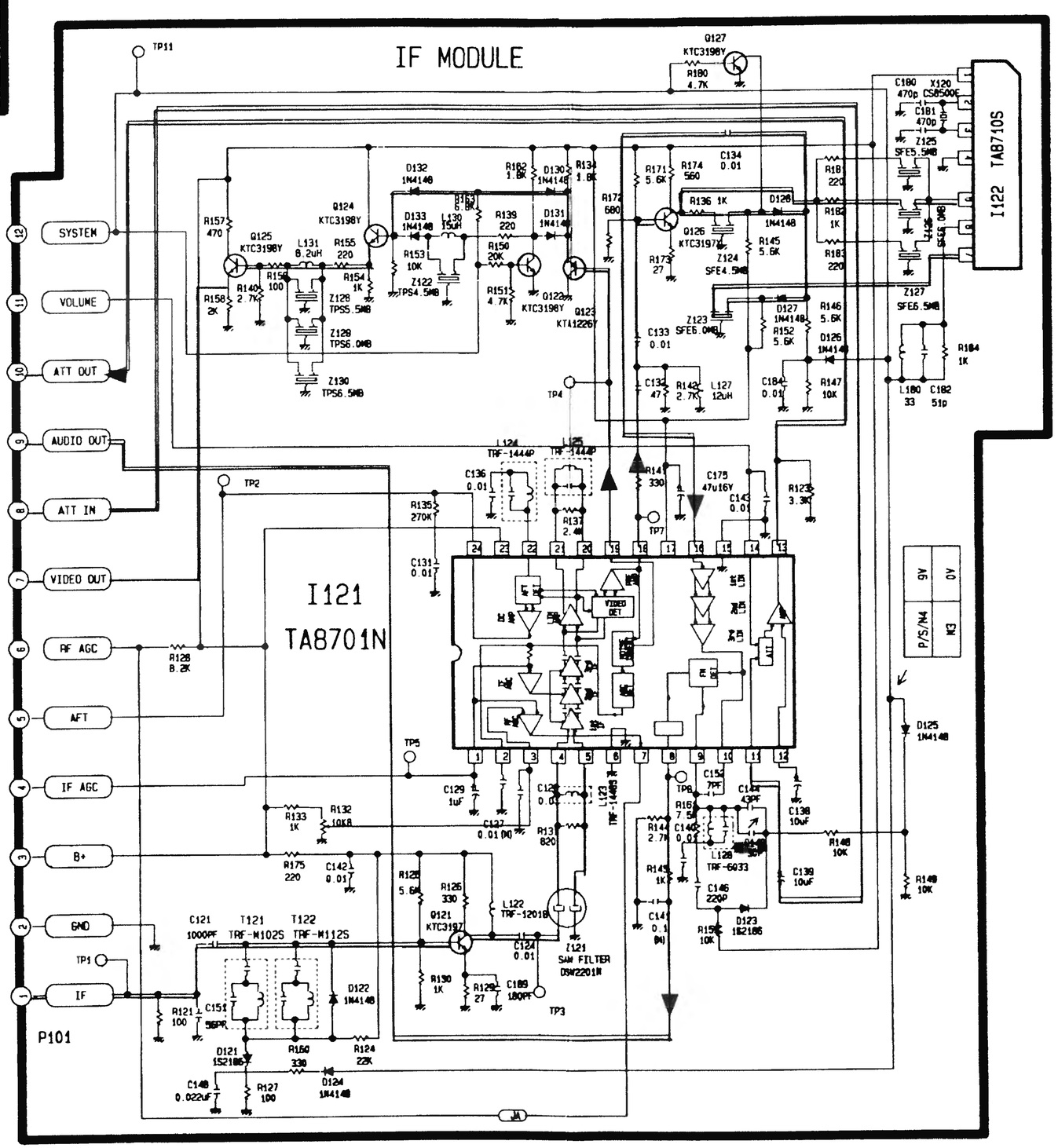

* THE DIFFERENCE PARTS OF DTK-1417/1649/2057/2157VMS

NO	LOCATION	PARTNAME	DTK-1457VMS	DTK-1649VMS	DTK-2057VMS	DTK-2157VMS
1		CRT SOCKET	1530	1530	1530	2030
2	C410	C - ELECTRO	160V 1uF	160V 1uF	160V 10uF	160V 10uF
3	C413	C - CERA	500V 820pF	500V 820pF	500V 820pF	500V 470pF
4	C416	C - MYLAR	BUP 1.6K 6900pF	BUP 1.6KV 6900pF	BUP 1.6KV 7500pF	BUP 1.6KV 7500pF
5	C417	C - CERA				2KV 470pF
6	C418	C - MYLAR	MPP 200V 0.3uF	MPP 200V 0.3uF	MPP 200V 0.39uF	MPP 200V 0.27uF
7	C441	C - CERA	500V 2200pF	500V 2200pF	500V 1000pF	500V 1000pF
8	C475	C - CERA	SL 500V 47pF	SL 500V 47pF	SL 500V 47pF	500V 100pF
9	R305	R CARBON	1/6W 18K	1/6W 18K	1/6W 18K	1/6W 15K
10	R306	R-CARBON	1/4W 24K	1/4W 24K	1/4W 24K	1/6W 16K
11	R351	R CARBON	1/4W 360K	1/4W 300K	1/4W 330K	1/4W 240K
12	R451	R CARBON	2W 3.6K	2W 3.6K	2W 3.6K	2W 4.7K
13	R416	R CARBON	2W 3.6K	2W 3.6K	2W 3.6K	2W 4.7K
14	R422	R CARBON	1/4W 240K	1/4W 240K	1/4W 120K	1/4W 120K
15	R444	R CARBON	1/4W 2.2K	1/4W 2.2K	1/4W 3K	1/4W 3K
16	R542	R FUSIBLE	1W 3.9	1W 3.9	1W 4.7	1W 5.1
17	P402	CONN WAFER	020 (5PIN)	020 (5PIN)	020 (5PIN)	020 (6PIN)
18	T402	FAT	DCF-1577A	DCF-1577A	DCF-2077A	DCF-2217A
19	R552	R CARBON	1/4W 3.9K	1/4W 3.9K	1/4W 5.6K	1/4W 7.5K

SAFETY CAUTION :

BEFORE SERVICING THIS CHASSIS IT IS IMPORTANT THAT THE SERVICE TECHNICIAN READ AND FOLLOW THE "X-RAY RADIATION PRECAUTION "SAFETY PRECAUTIONS" AND "PRODUCT SAFETY NOTICE" IN THE SERVICE MANUAL.

NOTE :

1. RESISTANCE VALUES ARE IN oHMS K = 1000 M = 1000000
2. CAPACITANCE VALUES I.0 AND ABOVE ARE IN pF THOSE BELOW ARE IN uF EXCEPT AS INDICATED.
3. INDUCTOR VALUES IN uF EXCEPT AS INDICATED.
4. VOLTAGES ARE MEASURED FROM CHASIS GROUND TO POINT INDICATED WITH A " VTVM " WHILE RECEIVING A COLOR BAR SIGNAL WITH CONTROLS SET TO THE MAXIMUM POSITION.
   (FOR A NOMINAL LINE VOLTAGE AC 240V 50Hz).
5. SINCE THE CIRCUIT DIAGRAM IS A STANDARD ONE THE CIRCUIT AND CIRCUIT CONSTANTS MAY BE SUBJECT TO CHANGE FOR IMPROVEMENT WITHOUT ANY NOTICE.

PRODUCT SAFETY NOTE :

SHADED COMPONENTS HAVE SPECIAL CHARATERISTICS IMPORTANT TO SAFETY AND SHOULD BE REPLACED ONLY WITH TYPES IDENTICAL TO THOSE IN THE ORIGINAL OR SPECIFIED IN THE PARTS LIST.
DONT'T DEGRADE THE SAFETY OF THE SET THROUGH IMPROPER SERVICING.